BLUE BOOK

DRESSAGE

SECTION 10

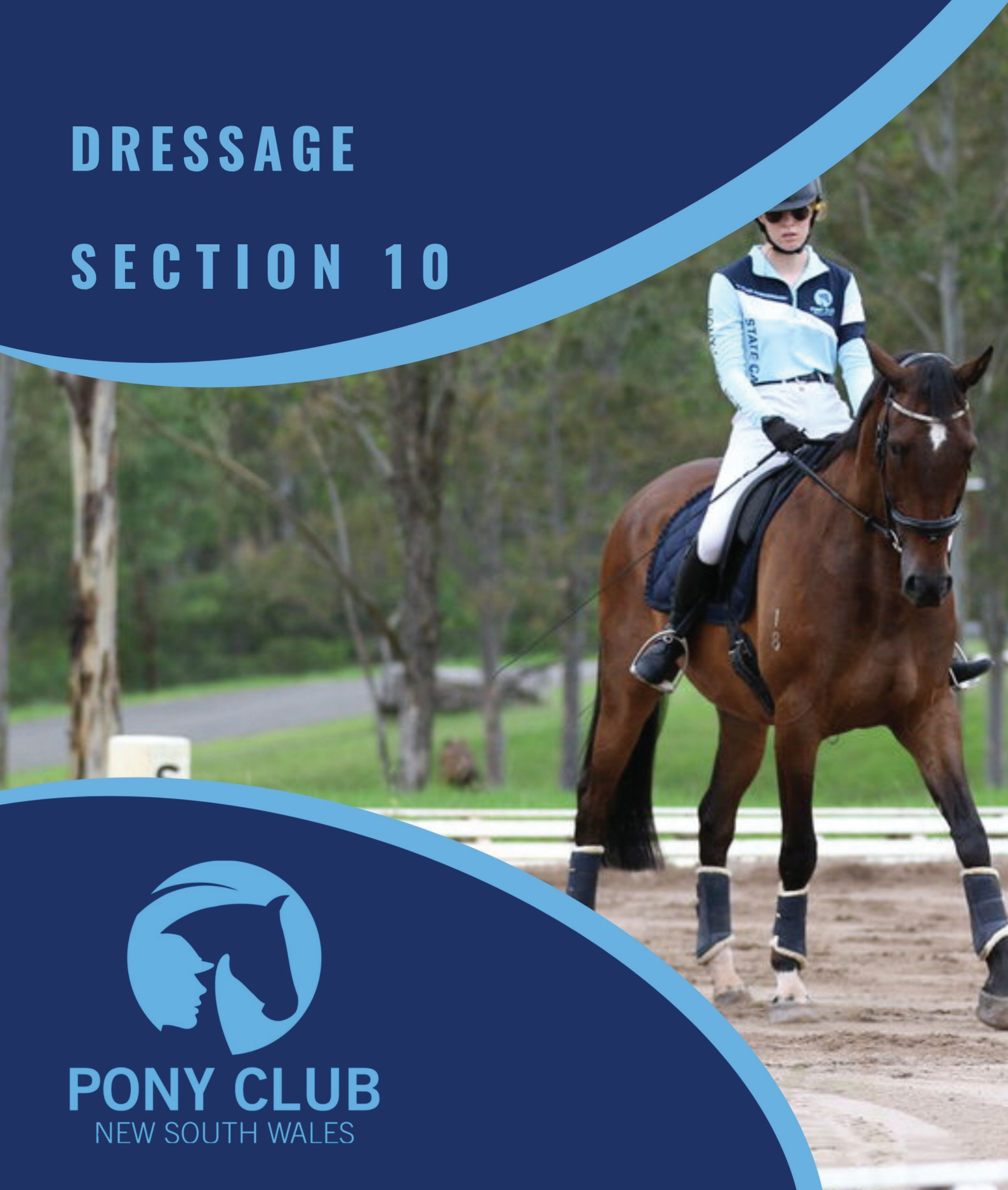

PONY CLUB
NEW SOUTH WALES

TABLE OF CONTENTS

1. COMPETITION RULES 3
2. STANDARD OF ENTRY 3
3. ELIGIBILITY FOR STATE CHAMPIONSHIP 3
4. CONDITIONS OF ENTRY 3
5. STARTING TIME FOR TESTS 3
6. AGE GROUPS 4
7. AWARDS 4
8. SCORING 4
9. FITNESS INSPECTION 5
10. STARTING OF TEST 5
11. DISQUALIFICATION 6
12. TEAM MANAGERS DUTIES 6
13. PRESENTATION PARADE 6
14. PROTESTS 6
15. TESTS 6
16. COMBINED COMPETITIONS (see EVENTING RULES SECTION) 7
17. COMMANDED TESTS 7
18. FREESTYLE TESTS 7
19. DECLARATIONS 7
20. EXECUTION OF TESTS 7
21. LEAVING THE ARENA 7
22. RIDING IN ARENAS 7
23. ERRORS OF COURSE AND ERRORS OF THE TEST 7
24. PENALTIES FOR ERRORS OF COURSE 8
25. TIME AND TIME PENALTIES 8
26. DOPING 8
27. SCORING (Judge/s) 9
28. SADDLERY, EQUIPMENT AND DRESS 9
29. SALUTE 10
30. LAMENESS 10
31. DISMOUNTING 10
32. RESISTANCE 10
33. THE POSITION AND AIDS OF THE RIDER 11
34. JUDGES 11
35. ARENAS 11
36. MARKERS 12
37. INSPECTION OF ARENAS 12
38. EXERCISE GROUND 12
39. JUDGES' SHEETS 13
40. UNMARKED MOVEMENT 13
41. OUTSIDE ASSISTANCE 13
Notes on the interpretation of dressage test sheets 13
Notes for competitors 14
Notes for Organisers of dressage competitions 15
Setting out an arena 17

PONY CLUB ASSOCIATION OF N.S.W.
RULES FOR DRESSAGE COMPETITIONS

I. COMPETITION RULES

In the event of conflict between Association rules and the rules of other equestrian bodies hereafter referred to precedence will be in the order set out.

i) The Pony Club Association of NSW
ii) E.A. Rules (current edition)
iii) F.E.I. Rules (current edition)

If a discrepancy between the rules of Pony Club NSW and E.A of a technical nature only is discovered, upon recommendation from the relative discipline Advisory Committee the Executive may approve a change to that rule. That change may be updated in the relevant Blue Book Section immediately. This is not to apply to any rules regarding gear or safety. Examples may include a change in scoring systems, refusals, errors of course, update of tests etc. If the Executive is not satisfied the change is of a technical nature the decision is to be held over to next meeting of the State Council.

If problems arise which are not clearly covered in these rules, the Association executive, Technical Delegate and Advisory Committee will make such decision as they consider will produce a fair result under the circumstances.

2. STANDARD OF ENTRY

At all State Championships the standard of competition will be high. It is the responsibility of the Zone Chief Instructor to ensure that mounts are fit and meet the required standard and that riders are capable of State Championship competition at the level entered.. The Zone Chief Instructor is the final arbiter of entries being submitted for Zone representation at State Championships.

3. ELIGIBILITY FOR STATE CHAMPIONSHIP

Rider — for membership qualifications and rally attendances. Refer section 4 Horse — for ownership qualifications. Refer section 4

PERFORMANCE CARDS

Performance cards are available from the Association. These are required to be taken to ALL COMPETITIONS and be endorsed by judges or event secretary, when placings are gained. These cards are to be kept up-to-date and will be required by the Zone Chief Instructor and Association for verification of performance for selection of interstate teams. They must also be available to the Zone Chief Instructor with nominations for State Championships.

Open performances may be noted for reference only.

Copies of performance cards may be requested by the Zone for verification of qualifying scores.

4. CONDITIONS OF ENTRY

Conditions of entry are listed in the event schedule available on the Pony Club NSW website.

5. AGE GROUPS

State Championship classes – Minimum entries are required for all classes to proceed. Age groups may be combined if sufficient entries not received.

- Preliminary – Under 11 years, 11 and under 13 years, 13 an dunder 15 years, 15 and under 17 years, 17 and under 25 years
- Novice – Under 13 years, 13 and under 17 years, 17 and under 25 years
- Elementary – Under 17 years, 17 and under 25 years
- Medium – Under 17 years, 17 and under 25 years
- Advanced – Under 17 years, 17 and under 25 years

Riders must have competed at this level previously, with a minimum score of 58%, copies of tests may be requested. Tests will be determined from time to time by the Advisory Committee and circulated in the schedule.

6. AWARDS

Championship award in each age group

Zone Team — one champion award only. Team to be comprised a maximum of 4 riders and a minimum of 3 riders. All scores to count. All N.S.W. Zone competitors are eligible for inclusion. Teams are selected on performance at the Championship.

Interstate Team — Championship Award.

Interstate teams are to be comprised of a maximum of 4 riders and a minimum of 3 riders. All scores to count. All riders are eligible to be team members. Teams are selected on performance at the Championship.

Presentation and Team Work Trophy.

7. SCORING

A point scoring system is used based on 10 points for first place down to 1 point for tenth place for each event in each age group. In the event of equal places these points will be awarded in a similar way to the division of money under normal competition conditions.

POSTING OF SCORES — the final Championship scores will be displayed for a minimum of 15 minutes prior to the award being made for THAT PARTICULAR CHAMPIONSHIP. The time of final posting of each score sheet will appear on the bottom of the score sheet.

If two or more judges officiate, the marks awarded by each judge must appear individually on the display score sheet.

INDIVIDUAL TESTS — In the event of a tie, a count back in that particular test will determine the placings. The count back is from the last allocated mark in the collective marks and so on back through the test.

AGE CHAMPIONSHIP — In the event of a tie a count back will be made on the higher-ranking test. The count back will commence with the total of this test (or in the case of two judges their combined total divided by two). If the marks remain equal a count back is then taken from the last collective mark awarded and so on back through the test.

INTERSTATE AND ZONE TEAMS — count back will be effective on the number of major places awarded to the tied competitors, i.e. 1 first placing coupled with 1 third placing (18 points) will take precedence over 2 second placings (18 points).

INTERSTATE AND ZONE TEAMS — In the event of tied placings for team champion a count back will be affected on major awards in the team. If a tie still exists a count back of major placings from the highest-ranking test will then take place.

8. DRESS AND GEAR CHECK

All saddlery, gear and uniform must conform to Pony Club NSW regulations as set out in Section 7 Gear and Uniform and Pony CLub Australia National Gear Rules.

Team managers are to be in attendance with team members.

9. STARTING OF TEST

1. Once the bell/horn is sounded the competitor has forty-five (45) seconds to commence their test.
2. Any competitor who fails to start within forty-five (45) seconds after the signal to start has been given may be eliminated.

9.1 Salute

Competitors are not permitted to remove their helmet in salute or for award giving. Retention harness must be firmly in place whenever the rider is mounted.

10. DISQUALIFICATION

Loss of helmet incurs elimination

A competitor who refuses to obey the direction of any officiating steward or official is to be reported to the Technical Delegate on the day and after consideration by the Advisory Committee, may be disqualified from all or some of the events.

The Advisory Committee reserves the right to disqualify a competitor for any breach of rule, or if the horse appears lame, exhausted, or unfit for competition or unacceptable behaviour by the rider. Also refer section 4.

A fall of horse and/or rider during a Dressage competition, between the time of entry and the time of exit at A, will be eliminated.

11. PRESENTATION PARADE

All competitors are to parade unless special dispensation is granted by the Advisory Committee — refer section 4 for details.

12. PROTESTS

Refer section 4.

These rules are established so that competitors and teams of competitors may compete against each other under fair and equal conditions.

The Association Advisory Committee, together with the Executive, Technical Delegate and the organizing committee, reserve the right to alter or delete any part of any program or make any alterations or changes required, if circumstances present. The Advisory Committee for Dressage is the Ground Jury with the power to co-opt if insufficient members of the Advisory Committee are present at the event. (Also refer General Championship Regulations — section 4.)

GENERAL DRESSAGE RULES (E.A.) for use at State, Zone and Club Competitions

As amended for Pony Club.

A Dressage event is composed of one or more competitions between individual mounted competitors performing specified dressage tests.

13. TESTS

Dressage tests are the Equestrian Australia Dressage Tests. Tests are graduated in difficulty of execution.

Note: These tests are changed from time to time and it is the responsibility of the competitors, judges and Organisers to ensure the correct tests are being used.

14. COMMANDED TESTS

Callers may be used at State Championships in all age groups with no penalty

Where callers are allowed it is the responsibility of the competitor to ensure that only the printed text or extracts there from is read out and that no other form of assistance is given. Failure to observe this rule may entail elimination.

15. FREESTYLE TESTS

These are subject to the same rules and standards as other tests.

16. EXECUTION OF TESTS

All movements set out must follow in the order laid down in the test. In a movement which must be carried out at a certain point of the arena, it is at the moment when a rider's body is above this point that the movement must be executed.

A test begins with the entry at A and ends after the salute at the end of the test, as soon as the horse moves forward. Any incidents before the beginning or after the end of the test have no effect on the marks. The competitor should leave the arena in the way that is prescribed in the text of the test.

Any outside intervention by voice, signs etc. is considered as assistance to a rider or to his horse. A rider or horse getting assistance must be eliminated.

17. LEAVING THE ARENA

A horse leaving the arena completely, with all four feet, during a dressage competition, between the time of entry and the time of exit at A, will be eliminated.

18. RIDING IN ARENAS

No horse either ridden or led may enter any arena, other than the practice arena, except when actually competing in a competition, on penalty of elimination.

Rope or chain arenas are no longer permitted at Pony Club.

19. ERRORS OF COURSE AND ERRORS OF THE TEST

a) When a competitor makes an "error of the course" (takes the wrong turn, omits a movement etc.) the judge warns him by sounding the bell. The judge shows him, if necessary, the point at which he must take up the test again and the next movement to be executed, then leaves him to continue by himself. However, in some cases when, although the competitor makes an "error of the course", the sounding of the bell would unnecessarily impede the fluency of the performance — for instance if the competitor makes a transition from medium trot to collected walk at V instead of K, or cantering up the centre line from A makes a pirouette at D instead of at L — it is up to the judge to decide whether to sound the bell or not.

b) Every "error of the course", whether the bell is sounded or not, must be penalised

c) When a competitor makes an "error of the test" (trots rising instead of sitting, at the salute does not take the reins in one hand etc.) he must be penalized as for an "error of the course". In principle, a competitor is not allowed to repeat a movement of the test unless the judge decides on an error of course (rings the bell).

d) If, however the rider has started the execution of a movement and tries to do the same movement again, the judge must consider the first movement shown only and at the same time penalise for an error of course.

e) If the judge has not noted an error, the competitor has the benefit of the doubt.

f) The penalty points are deducted on each judge's sheet from the total points obtained by the competitor.

IMPORTANT

In Association competition, errors of course are to be notified by the judge to the competitor at the time the error occurs. Errors of execution that do not involve errors of track and do not interrupt the flow of the test should be marked down on the 1 to 10 scale.

* This rule will take precedence over any conflict in the previous paragraphs.

20. PENALTIES FOR ERRORS OF COURSE

Under Dressage rules, every error whether rectified or not, every omission and every movement taken in the wrong order must be penalised as under:

- The first error by ***2 points***
- The second error by ***4 points***
- The third error by ***Elimination***
- The fourth error by ***Elimination***
- Loss of helmet ***Elimination***
- Failure to immediately replace helmet ***Elimination***
- Resistance which prevents the continuation of the test longer than 20 seconds ***Elimination***

21. TIME AND TIME PENALTIES

Only free style tests are timed.

22. MEDICATION CONTROL

Riders: Riders are forbidden to take a stimulating or calming product in any shape or form, before or during a competition under a maximum penalty of disqualification.

Horses: It is forbidden to administer any stimulant or depressant to a horse, or to cause one to be administered in any way whatsoever either before the start of a competition or on the previous day under the maximum penalty of disqualification for life of the owner, rider, horse and groom.

If during the event, or after a test which forms part of a combined competition, it is necessary to treat a horse with a drug that is calming, antitetanic, fortifying, stimulating etc. the veterinary surgeon appointed by the organizing committee must be informed immediately. He will verify the expediency of the treatment given and then make a report to the technical delegate, who will decide whether the horse is to be allowed to continue or to be eliminated. All stimulating or fortifying treatment not considered necessary by the accredited veterinary surgeon and administered during, or after a test which continues on the following day(s) involves the compulsory elimination of the horse.

If the treatment has been for colic only, the advisory committee appointed to examine the condition of the horses, decides before the beginning of the next test, whether the horse is in a fit state to continue, or should definitely be eliminated.

23. SCORING (JUDGE/S)

Each judge may allot from 0 — 10 points for each numbered movement. Half points may be used. These points are then added together, and any penalty points are deducted.

It is essential that all penalty points are deducted from the individual totals before these are added together. The judges' marks for both tests shall be totalled to find the final mark.

Total points for each judge must be clearly shown in results lists and on notice boards.

SCALE OF MARKS

Under both rules the scale of marks is as follows:

10 excellent	5 sufficient
9 very good	4 insufficient
8 good	3 fairly bad
7 fairly good	2 bad
6 satisfactory	1 very bad

The marks 10 and 0 must be awarded where the performances warrant their use. By "not executed" is meant that nothing which is required has been performed.

24. SADDLERY, EQUIPMENT AND DRESS

Dress: All saddlery, gear and uniform are to conform to Association regulations. All competitors must wear full Pony Club uniform, i.e. long-sleeved shirt (worn with sleeves down and buttoned up), tie, fawn, beige, white or oatmeal jodhpurs (the wearing of a coat is NOT permitted). If a jumper is worn at State Championships it must be of knitted wool or wool blend, it shall have long sleeves or be a sleeveless pullover, with a V-neck and be of one plain colour.

Refer Pony Club Austratia National Gear Rules https://ponyclubaustralia.com.au/resource-hub/competition/

25. SALUTE

All riders must take the reins in one hand when saluting. Salutes otherwise incorrectly executed will be penalized by marking down on the 1 — 10 scale.

A whip may be carried in either hand at the salute. This is not a course error.

26. LAMENESS

In the case of marked lameness, the judge informs the rider that he is eliminated. There is no appeal against this decision.

27. DISMOUNTING

If, after the rider has entered the arena, he/she dismounts without a reason acceptable to the judges, no marks will be given for the movement.

In the case of a fall of horse and/or competitor, the competitor will be eliminated. The rider must be mounted on entering and leaving the arena.

28. RESISTANCE

Any horse failing to enter the arena within 60 seconds of the bell or other type of notification being sounded shall be eliminated.

Any resistance which prevents the continuation of the test for a period exceeding 20 seconds during the course of a test shall be penalized by elimination.

Grinding of teeth and tail swishing

Grinding the teeth and swishing the tail are signs of nervousness, tenseness, or resistance on the part of the horse and must be taken into account by the judges in their marks for the movements concerned as well as in the appropriate collective mark at the end.

29. THE POSITION AND AIDS OF THE RIDER

a) All the movements should be obtained without apparent effort of the rider. He should be well balanced, with his loins and hips supple, thighs and legs steady and well stretched downwards. The upper part of the body easy, free and erect with the hands low and close together without however, touching neither each other nor the horse and with the thumb as the highest point; the elbows and arms close to the body, enabling the rider to follow the movements of the horse smoothly and freely and to apply the aids imperceptibly. This is the only position making it possible for the rider to school his horse progressively and correctly.

b) Not only the aids of the hand and the legs but also of the seat, are of great importance in dressage. Only the rider who understands how to contract and relax his loin muscles at the right moment is able to influence his horse correctly.

c) Riding with both hands is obligatory at all dressage events, when executing any of the tests. However, when leaving the arena at a walk on a long rein, after having finished his performance, the rider may, at his own discretion, ride with only one hand.

d) The use of the voice in any way whatsoever, or clicking the tongue once or repeatedly, is a serious fault involving the deduction of at least 2 marks from those that would otherwise have been awarded for the movement where this occurred.

30. JUDGES

Judges for State Championships are invited by the Association.

a) Positioning of judges around arena — at State Championships two judges will be used.

b) The following may not serve as judges:

- The owner of a horse taking part in the competition
- A competitor taking part in the competition
- A close relative of those mentioned in i. and ii. above
- Team managers whose competitors are entered in the competition
- Instructors of competitors entered in the competition
- A member of the advisory committee of the same competition

Judges must be provided with a writer/penciller.

31. ARENAS

All tests in Pony Club are ridden individually within an arena of 60m x 20m according to the instructions on the test sheets. Plans of the arena are to be found at the end of this section showing the position of the markers.

Arenas should be set out to the dimensions shown in the diagrams on the following pages.

The arena should be level and separated from the public (including videos and cameras) by a distance all round of at least 10m from other events, if more room is not available. Roping or bunting should be used when necessary to prevent intrusion.

The arenas may be marked in the following ways:

a) By a continuous surround of white boards/ white rails/ white plastic pipe.

b) By a timber or other suitable enclosure, any of which at State Championships must be white

c) Only plastic/polythene or similar material (not metal) is to be used for letters and/or numbers.

d) Rope arenas are forbidden.

32. MARKERS

The letters outside the enclosure should be placed about 0.50m from the fence and clearly marked. It is desirable to place a special marker on the fence itself, level with and in addition to the letter concerned.

A gap of about one metre each side of the centre line must be left at A to form an entrance and the A marker placed far enough back, 10m if possible, to allow the horses to enter the arena on a straight track.

33. INSPECTION OF ARENAS

It is the responsibility of judges to check that the arena is satisfactory, and have it modified at their discretion.

34. EXERCISE ARERA

Sufficient level ground and if possible, a practice arena should also be provided.

35. JUDGES' SHEETS

Competitors may be given their judging sheets on the completion of the contest but not until the technical delegate has sanctioned their distribution.

Competitors taking part in two dressage competitions on the same day, judged by the same judge, shall not have access to their judging sheets before competing in the second contest.

Judges' marking sheets with remarks duly signed by the judge must be treated as confidential until given to the competitor, when they become his or her private property. The Organisers of the competition are not obligated to make public any figures other than the classification of the results, though they are at liberty to do so should they wish.

Judges should state reasons when giving marks of below 5 or above 7.

36. UNMARKED MOVEMENT

If a mark has not been recorded on one of the judges' sheets and the judge cannot recall the movement, or cannot be found, the mark allotted should be the average of the collective marks at the end.

37. OUTSIDE ASSISTANCE

Any outside intervention by voice, hands etc., is considered outside assistance and will incur elimination. This refers to people outside the arena.

NOTES ON THE INTERPRETATION OF DRESSAGE TEST SHEETS

(These notes are not rules)

A rider in movement along the outer track will continue along it on the same rein without alteration of pace or manner of riding (e.g. sitting or rising), until instructed to do otherwise. If required to leave this track and return to it (e.g. when circling), the rider will continue along the track in the same manner of going as he left it and on the same rein unless instructed to do otherwise.

In all tests, all trot work is executed "sitting" unless otherwise indicated in the test concerned.

Change of pace at a given marker. The horse should make the first step in the new pace as the rider passes the marker. (It follows that when the transitions are progressive they must begin before reaching the marker.) This note might seem at variance with the way a simple change of leg at the canter is normally performed. However, the movement fully stated is "Simple change of leg through a walk" and this involves at least two changes of pace of which the first is from canter to walk. If the horse first walks at the marker and after two or three walk steps strikes off at the canter on the other leg, the movement will be done as required and the above rule will hold good.

Duration of judging. The judging begins when the rider enters at A and finishes when the rider leaves the arena at A.

NOTES FOR COMPETITORS

Competitors will assist stewards in the efficient running of events by:

Reporting their presence to the class steward while riding-in, if possible 20 minutes before their starting time and being on hand nearer the time to receive the steward's signal to go to the arena;

By riding where directed close to the arena as soon as the previous competitor has made his exit;

Beginning their test without delay on receiving the judges' signal to start;

On a signal being given for error of course, proceeding immediately to the judges to receive instructions;

By ensuring that they are conforming to the rules regarding dress and saddlery.

NOTES FOR ORGANISERS OF DRESSAGE COMPETITIONS

INTRODUCTION

The purpose of these notes is to help Organisers who lack experience of the work involved by drawing attention to matters requiring consideration and possible action, depending on the type of event being organized.

The notes should be read in conjunction with the "dressage rules", which lay down the basic requirements for all competitions.

The circumstances in which dressage competitions are held vary considerably. There are events confined to dressage contests and others, such as horse trials, in which a dressage test is only one of the phases of the competition: there are small club fixtures attracting few competitors and lasting a few hours only, as well as important, possibly Championship events occupying two days and using many arenas.

Clearly the necessary secretarial and field work will vary accordingly, and Organisers must use their judgement as to what is suitable for the event they have in hand.

It is hoped that these notes will be useful as an aide-memoire or reference list to ensure that nothing of importance has been overlooked. The list is intended to cover the possible requirements for important events but for smaller fixtures a shorter working list could be made from it and this course is strongly recommended. In the case of horse trials, the provision of many of the facilities would be arranged by the organizing committee. Nevertheless, the dressage representatives on this committee should press for early decisions on matters affecting the smooth and timely planning of the dressage phase.

The testing time for Organisers often comes during the week before the event, when arrangements apparently completed, fall to pieces due to sickness, accidents and the like. The persons chiefly responsible for sections of the work should be available by telephone daily and arrange to be sufficiently free to deal promptly with any difficulties.

SECRETARIAL

a) **Preparatory** (roughly in chronological order)

- Program — decide on classes to run
- Judges — invite (3 months ahead if possible) stating date, place, test, probable time of starting and probable duration, lunch provided; ask if writer should be provided. Confirm in writing the following day details of appointment if made verbally.
- Canteen
- Safety Officer be appointed to conduct a risk analysis and review Biosecurity requirements
- Letter markers
- Schedules with entry forms
- Back numbers if required.
- Judges writers and stewards — appoint
- Ribbons
- Test sheets (small) — order from Association; one for each judge and one for each penciller (to study).
- Charges — gate (if applicable)
- Mark car park
- Sponsor — invite, if any
- Programs — have printed or duplicated — include name of caterer, sponsor, if any; arena number of each class
- Telephone numbers of veterinary surgeon and doctor available in secretary's tent — or appropriate arrangements
- Judges and stewards — write to about 21 days before the event confirming appointment, time of starting, enclosing "official" entry ticket. Confirm writers and send a copy of the test

b) **On the day**

- Safety Officer to conduct a Safety Briefing
- Tables and chairs — for scorers
- Scoreboards and marker
- Judges and writers lunches, coffee
- Back numbers
- Competitors starting times — list to post up (if applicable). Programs "dressage rules"
- Loud hailer
- Notebook, cellotape etc
- Judges requirements — assembled ready for each judge:
  - Hardboard, clip, pencil, score sheets — one per competitor and one spare, competitors time schedule for the class.
  - Car for judging in — if judges own not available. Add in thankyou gift for judges
  - Bell or whistle if required.

- Stewards (chief and ring) requirements for each — hardboard, clip and pencil for ring stewards. For chief steward — time schedules for all classes, list giving names of judges and writers for each class.

c) **After the day**

- Letters of thanks and expenses to judges and perhaps any other special helper

FIELD WORK

Planning:

Decide on suitable positions for:

- Arena(s) — if several, these should be at least 10 metres apart — located as free as possible from disturbance from outside sources (e.g. busy road, horses jumping).
- Toilets, secretary's facilities, car parks, practice areas etc.
- Procure arena markers
- Conduct a risk assessment.

Setting out arenas:

See supplementary note for exact method.

- Fill in any holes in arenas
- Arrange to mow arena area — close mow centre lines
- Rope off if danger of spectators or riders from other classes (e.g. juniors in gymkhanas) likely to invade and provide suitable signage
- Arrange access for judge's cars and competitors to arenas
- Locate and determine limits of riding-in area(s) away from any cars
- Arrange, if possible, that judges will not be facing the sun
- Gear check area.

Signposting etc:

- Direction signs on neighbouring road.
- Site notices for car park, arena numbers, fresh water, secretary's facilities etc.
- Provide paper in toilets.

On the day:

The chief steward should himself or by delegation:

- Arrange for gate to grounds to be unlocked or open at least one and a half hours before the competitions begin
- Brief stewards on their duties
- Meet judges on arrival, introduce their writers and assign to respective arenas
- Ensure that score sheets are being collected
- Ensure that classes are running to time
- Supervise the re-sitting or extension of arenas if necessary
- Attend to the welfare of sponsor if present
- Marshal winning competitors to receive awards
- Ensure, at award giving, public expression of thanks to owner of site, judges, sponsor, helpers etc.

SUPPLEMENTARY NOTE(S)

DUTIES OF:

Gear Check Steward — checks competitors dress, gear, whip etc.

Ring Stewards — in general you will require one per arena that is in use at any one time. Their duties (on which they will be briefed by the chief steward) are to: see that judges and writers have all necessary equipment, see that competitors exercise within the limits of the riding-in areas.

Chief Steward

- Advise competitors if class is running late.
- Organise marshals to chase up if competitor has not reported by time due.
- Try to keep running to time: if necessary, ask competitors to present themselves, riding at a walking pace around and just outside the arena, immediately the previous competitor has made the final salute and begin the test promptly on receiving the signal to start.
- Advise the judge of any change.
- See that any arena boards which have been knocked down are replaced.

  N.B. — unless a board has been displaced across the track the replacement must be done between tests. Ensure that the judge and writer are properly looked after during the coffee and luncheon breaks and are treated as guests of the Organisers.

Runners — are to collect score sheets from writers and take them to the secretary or scorers.

- The number required will depend on the number of classes running concurrently. They should collect after every 2 or 3 ridden tests taking care not to disturb judge or writer until sheet has been signed.
- Convey information from secretary to ring steward or vice-versa.
- Stewards — if required for gate, car park, programme.
- Stewards for refreshments
  - To judges and writers
  - To deal with if caterers not employed.

SETTING OUT AN ARENA

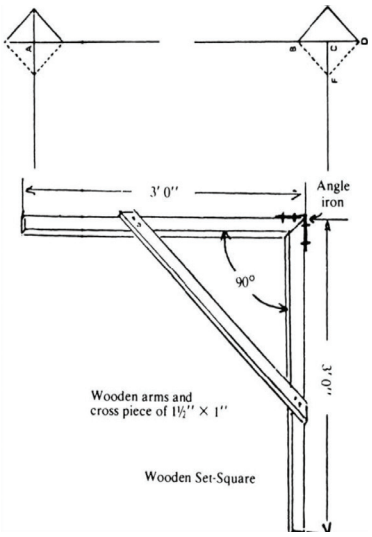

Place a peg in the ground at one corner of the arena. Measure one long side of the arena (for a small arena 40m) and place a peg at that distance. These are pegs A and C in the diagram.

Extend the line AC by, say 3.5m to D and measure back from C towards A the same distance, to B, putting temporary pegs in at D and B.

Using about a 9.1m length of twine (the exact length doesn't matter) tie a small loop at both ends; then find the exact middle and tie another loop there. Place one end loop over the peg at B and the other end loop over the peg at D. Holding the middle loop, tighten the string, first to the right and then, as a check, to the left, to obtain points E and F. Peg these points. If this has been done correctly, E, C and F will be in a straight line at right angles to AC. Extend this line 20m as from C and the third corner of the arena is fixed. Repeat the procedure at A to find the fourth corner.

This is a quick and accurate method; with practice it will be found that further short cuts can be made, e.g. you can measure AD (40.3m plus, say 3.5m at each end) at one go and peg B and C en route.

Variant (a) Using the above method for marking out a right angle the setting out can be started from a chosen short side or the centre line for the arena if either is preferred as a base to work from.

Variant (b) Since the main problem in setting out is to establish lines at right angles, a useful tool for one who is frequently engaged in this work is a wooden set-square (easily home-made) as shown on the sketch.

If the apex of the set-square is placed on the ground at a corner peg and one arm is sighted to lie along the base line, the other arm will point in a direction at right angles to it and the next corner peg can be sighted to be in this alignment.

By using a set-square some of the subsidiary measuring is eliminated. Furthermore, the ends and long sides of the arena can be quickly laid out by using one or more line prepared with small loops at each end through which meat skewers or other suitable pegs can be inserted to pin them down as required.

Such prepared lines become stock material and should be checked for length each time they are brought out in case shrinking or stretching has occurred.

Plan of 60 metres x 20 metres Arena

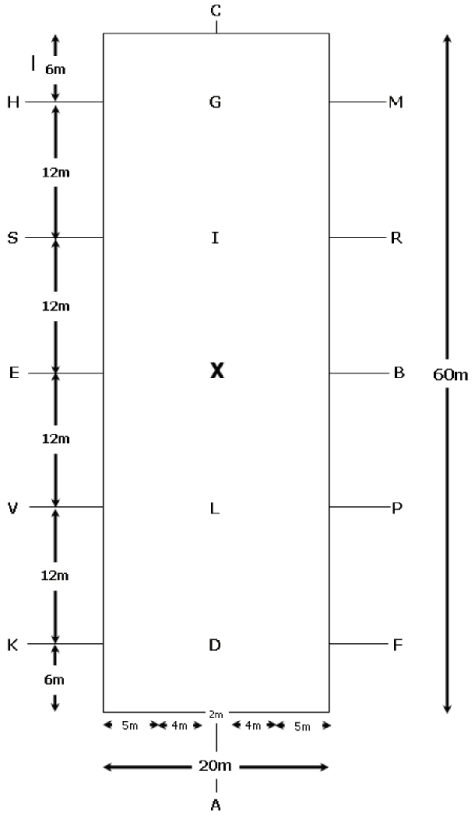

Plan of 40 metres x 20 metres Arena

